A novel bio-signal acquisition system for brain computer interfaces

Lajos Losonczi, László F. Márton, Tihamér S. Brassai, László Bakó, Loránd Farkas
Department of Electrical Engineering
Sapientia - University of Transylvania
Tîrgu Mureș, Romania
lajos.losonczi@ms.sapientia.ro

Lajos Losonczi, Loránd Farkas
R&D Department
Lambda Communications Ltd
Tîrgu Mureș, Romania
lajos@lambda.ro

Abstract— *The aim of this paper is to present the newly developed electro-technological and signal processing ideas that can provide an improved brain-computer interface (BCI) system with significant advance in its performance. A BCI system allows to record bio-signals. Technologies based on the information extracted from these bio-signals are able to act on the environment. The brain activity can be used to control systems from the technical surroundings. Electroencephalogram (EEG) signals are the recorded potentials of collective activity of synchronized cortical cell populations chained to an external system. Our basic tasks are to improve the signal-to-noise ratio and to solve spatial and temporal actions of the measured signals on the external environment. For these reasons we propose a completely new concept of active electrodes, named Smart Active Electrodes (SAE).* (*Abstr act*)

Keywords— EEG, Smart Active Electrode, Wireless Embedded System, Signal Processing, BCI)

I. INTRODUCTION

The use of modern technologies is becoming widespread in biomedical research. Technology has now advanced to the point where the analog input and output devices can be produced on the same integrated circuit, whereon the digital microcontroller and its logic supports and memories are also present.

The development of embedded system techniques and their integration with novel signal processing methods has raised the possibility to create structurally more sophisticated, non-invasive EEG signal measurement systems. More complex and more efficient signal processing methods are required as electronics develop, allowing the implementation of various, real time acting brain computer interfaces (BCIs).

The considered developmental process had the following priorities:

- improvement in signal acquisition, amplification and conditioning;
- introduction of new procedures for noise attenuation, separation, compensation and analysis;
- tuning the adaptive systems by using embedded microcontrollers;
- implementation of smart active electrodes , that get "smarter" while reducing their size;
- real-time interpretation of the acquired signals via hardware implemented advanced methods.

The parameters of the Smart Active Sensor Acquisition System (named Lambda Scalpomat), developed by us, conforms to these priorities, since it can be characterized as having long term power autonomy, uses dry electrodes and special instrumental amplifier technology. Together with the digital signal conditioning, radio communication modules and the microcontroller-based control unit, the whole sensor equipment is concentrated on a small form factor Printed Circuit Board (PCB). While enabling the improvement of the human subjects comfort, this arrangement also yields the possibility of this system's employ in wide range of BCI applicability fields (entertainment, sports, motor substitution & recovery).

The solutions used in the hardware development process of the SAE system, is presented in the following section. In section three we show how the signals acquired, and transmitted wireless by the smart sensor network are processed in real-time by special algorithms implemented on an embedded platform.

II. DEVELOPMENT OF THE SMART EEG SENSOR NETWORK

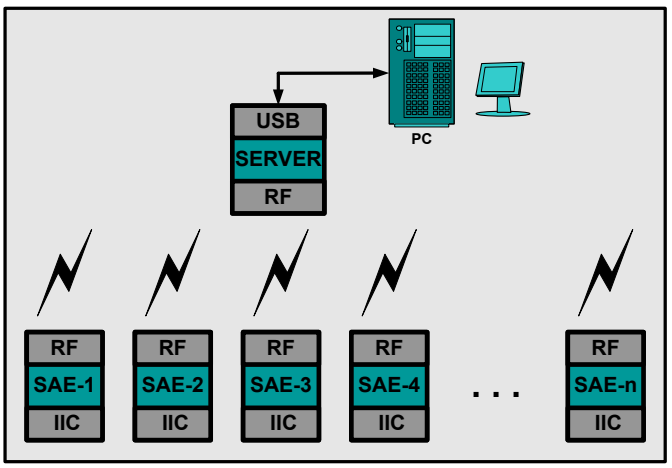

Fig. 1. *Wireless network of SAE nodes*

Lambda Scalpomat was designed to capture and process bio-signals (mainly EEG and ECG signals), to provide maximum flexibility and high quality recordings of the physiological waveforms, and to offer wireless communications capability. The small size of the Lambda Smart Active Electrodes makes them ideal for a large number of biological applications, laboratory activities and research. Realization of a wearable measurement system should be based on new approaches, in at least 5 directions:

- the sampling electrode type must be dry, and the full conditioning chain of the measured signals should be integrated into the independent wireless sensor node, which is the basic element of the measuring system.
- the digital channel must assume several functions of the analog channel and in addition, it should have some new features as: adjustments, adaptive filtering, parameter tuning, compensations, calibrations.
- some mathematical conversions, analysis and processing of data extracted from the recorded signals should be performed in the embedded microcontrollers of the distributed measurement nodes.
- all controls and adjustments of the measurement channel of an elementary node are also performed in the built in microcontroller, therefore each measurement node becomes a true smart active electrode (SAE).
- finally, SAE nodes must include wireless communication capability, because they must be distributed in a wireless communications network (as shown in Fig. 1), or a wired network, where nodes form a cluster with a wireless master node, communicating P2P with a top level structure (Fig. 2).

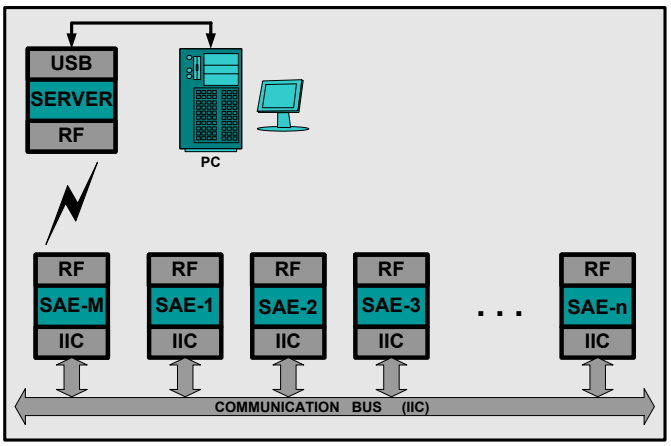

Fig. 2. *Wired network of SAE nodes*

Fig. 3 shows the basic structure of a SAE measurement node. For measuring artifacts affected weak bio-signals covered by noise, we use a special analog signal-conditioning channel. The sampled signal is amplified by a monolithic precision instrumental amplifier based on the classic 3-op amp topology, but with excellent technical specifications: 0.25µVpp input noise (0.1 to 10 Hz), 90dB CMRR (G=1), 0.4nA input bias current. The chosen solution also contains conditioning methods which already have become classical: common mode signal collection (operational amplifier OA4) and using it for shielding reference electrode path respectively for DRL signal formation (OA7); DC input voltage suppression (cutoff frequency: 0.05Hz) by inserting an integrator in the negative feedback of the amplifier DC output voltage (OA1); cutting off the high frequency components (cutoff frequency: 4000Hz); careful formation of the voltage reference (+2.5V, max. noise 3µVpp/V). The differential gain of the first amplifiers stage, (instrumental amplifier IA1) is established at 50, and the second stage (OA2) gain is fixed at 20. The low-noise programmable gain amplifier (PGA) provides gains from 1 to 64 in binary steps. The ADC consists of a two channel multiplexer and a fourth order 24-bit sigma-delta modulator that can achieve up to 30 ks/s and a 6th order programmable digital filter.

Besides these resources, we intervened in the measurement loop in at least 6 points, to correct the channel conditioning parameters. Thus, it is necessary to calibrate dynamically the voltage offset between two measurements, otherwise the analog channel can easily saturate. The self-calibration circuit corrects the internal offset and gain error (calibration time: 2.4ms). The fast recovery circuit (K1) allows the IA1 amplifier to quickly reach a proper DC level after an artifact saturates its output, by dramatically decreasing the OA1 integrator time constants (recovery time: max. 10ms).

To verify the correct application of the electrode on scalp, we use an ingenious genuine method. The sensor detects current sources (SDCS) providing a current of ISD=2µA to the sensor through the input multiplexer (K3 and K4). When enabled (K6), they source ISD to the input pin connected to Ea1 (we assume that K2 was switched previously directly to the Ea1 entry) and sink ISD from the input pin connected to Ea2. In this case, the signal measured by the ADC will be $I_{SD} \cdot \left(R_{K3} + R_{K4} + R_{Ea1-Ea2}\right)$. Figures Fig. 3 and Fig. 4 show the physical position of the Ea1 and Ea2 electrodes within the SAE.

Note that pins are placed circularly, with 3 shorted pins for each electrode shifted by 2 between them. Thus, the voltage measured by the ADC provides indeed the means to verify the electrode-skin contact integrity.

Because the dry electrodes have very large contact impedance and the impedance variation is also large, the deduction of the motion artifact (MA) is very important. Most of the electrode-skin impedance change is the result of MA, thus they have a very large correlation factor and the impedance variation can be used as an error signal for an adaptive filter in order to reduce MA.

We can measure the amplitude and phase of an additional common mode reference voltage of the DRL circuit. The state of the MA is continuously monitored by a second instrumental amplifier, and by multiplication (synchronous demodulation) with the original common mode signal.

An additional power supply and common-mode rejection modules are implemented with three different methods.

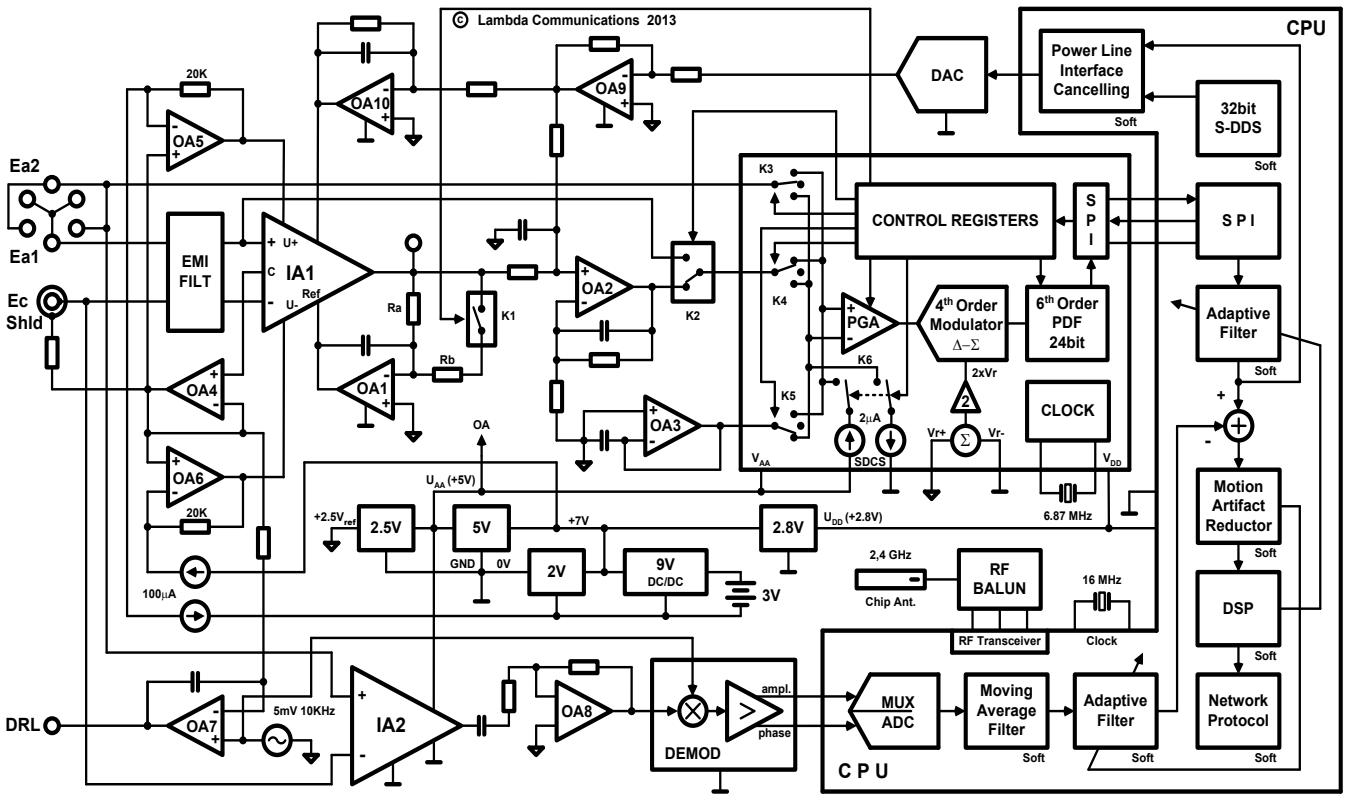

Fig. 3. *Smart Active Electrode - general architecture*

The first is setting appropriately the overall frequency response of the programmable low-pas filter.

The second method is driving the power supply connections of the input op amps from common mode referenced sub-regulated supplies. The outputs of the positive (OA5) and negative (OA6) sub-regulators are connected to the power supply of the input IA1.

Finally, we obtained a further supply voltage rejection by simplified direct digital synthesis of the sinusoidal power line signal and its decreasing form the measured signal using an implemented software algorithm.

We also achieved significant innovative progress in system power consumption optimization, in wireless communication optimization and in solving the SAE attachment on the scalp.

Additional results: SAE construction is done on a PCB prepared on 3+1 levels (RF+CPU layer, digital + power layer, analog layer, electrode layer), each PCB level has 21mm diameter (Fig. 4).

Most of the firmware routines were written in machine code to save memory space, for precise process timing and speed of execution. Power supplies are: 5V/7mA (analog), 2.8V/30mA (digital). For experiments with sampling rate of 2000 sps, we achieved: CMRR 112dB, global input noise 0.9μVpp. Powerful, signal processing toolbox was created based on proper procedures for the recorded nonlinear and non-stationary time series.

An embedded multitask scheduling mechanism is used to enhance the efficiency of the embedded system and to ensure that the system can properly execute, in real-time, the electrode calibration, the digital signal conditioning, control functions, communication functions, the network protocol, the power saving function and other necessary real time signal preprocessing procedures.

Since the prospected applications need real-time information, the processing must be performed also in real-time. We have developed procedures that meet these requirements. These procedures are based on principles of pattern recognition system that act in time-domain on a one dimensional signal. Classical processing methods are based on FFT (Fast Fourier Transform) type of analysis and need fast transform to frequency domain of the signal.

To achieve distortion-free transforms we have tested two procedures that are not based on the Fourier theory and yield much better pattern recognition performance.

Our new procedures for signal pre-processing, feature extraction and classification are based mainly on continuous Wavelet and Hilbert-Huang transforms [9]. Since both procedures are highly time-consuming, these can only be implemented with real-time performance, on a hardware platform that has native parallel processing capability. The need for real-time processing of the extracted information is endorsed by the fact that the ultimate goal is the use the system in autonomous, mobile systems, rather than in laboratory environment. During the

Wavelet procedure, for each wavelet-scale - each corresponding to a frequency component - can be computed in parallel. A main goal in this procedure was to find, based on experiments, the proper classification method for pattern recognition during ERP (Event Related Potential type of experiment) or other EEG signal based tasks.

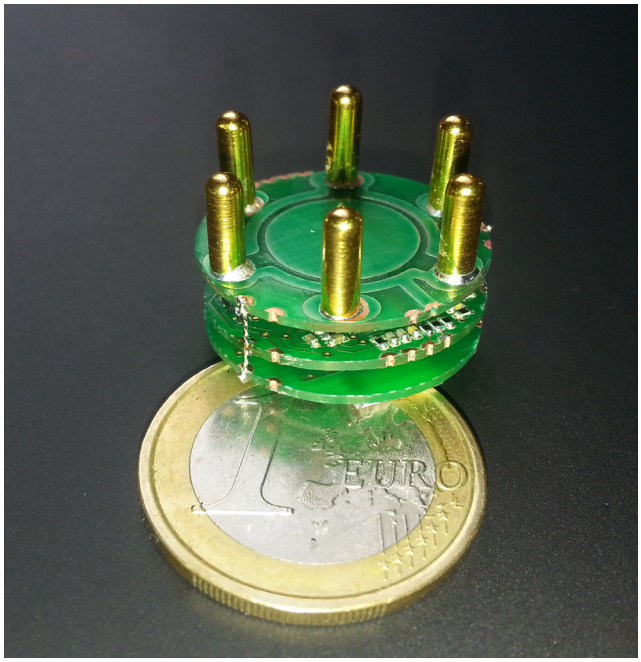

Fig. 4. *Lambda SAE*

III. CONCLUSIONS

A wireless embedded system with real-time bio-signal processing ability is presented in this paper. The basic functions of the system were described, including biomedical signal acquisition, amplification and wireless transmission on the sensor side and advanced signal processing on embedded digital platform on the interpreter side. The main design goal was achieved by keeping the size and cost of the electrode comparable to a standard EEG electrode and to grab the gainful information from the signal in real time, thus enabling prospective applications in high interest areas of the BCI domain.

Based on our advances in knowledge and experience gained in more than a year long research activity of the current project, we created the experimental model of modern biomedical signal recording equipment, with one of the best functional parameters worldwide. We are also interested in a collaboration concerning the improvement of our bio-signal recording equipment that can serve specialized purposes.

ACKNOWLEDGMENT

This work is part of the project funded by the Romanian National Authority for Scientific Research, grant No. 347/23.08.2011.

REFERENCES

[1] C.D. Binnie, A.J Rovan, T.A. Gutter, Manual of Electroencephalographic Technology, Cambridge UK, Cambrge Univ. Press 1982

[2] V. Izosimov, &al, Design Optimization of Time- and Cost-Constrained Fault-Tolerant Distributed Embedded Systems, IEEE Design, Automation and Test, 2005

[3] H. Karl, A. Willig, A. Wolisz ,Wireless Sensor Networks, Springer Verlag Berlin, 2004, 1-17

[4] R.F. Yazicioglu, C. VanHoof, R. Puers, Biopotential Readout Circuits for portable Acquisition Systems, Springer Verlag Berlin, 2009

[5] K.V.T. Piipponen, R. Sepponen, P. Eskelinen, A Bio-signal Instrumentation System Using Capacitive Coupling for Power and Signal Isolation, IEEE transaction on biomedical, Vol. 54, No. 10, October 2007.

[6] W. Maass, T. Natschlager, H. Markram, Real-time computing without stable states: A new framework for neural computation based on perturbations, Neural Computation, 14 (11), 2002, pp.2531–2560.

[7] D. Floreano, P. Dürr, C. Mattiussi, Neuroevolution: from architectures to learning, Springer-Verlag, Evolutionary Intelligence, 2008, 1, pp. 47–62, DOI 10.1007/s12065-007-0002-4.

[8] H. Kopetz, Real Time Systems – Design Principles for Distributed Embedded Applications, Kluwer Academic, Hingham, Mass., 1997

[9] G. Coulouris, J. Dollimore, T. Kindberg, Distributed systems - Concepts and Design, Addison Wesley, ISBN13: 9780321263544, 2005

[10] Christopher Torrence and Gilbert P. Compo, *A Practical Guide to Wavelet Analysis,* Program in Atmospheric and Oceanic Sciences, University of Colorado, Boulder, Colorado, 1992

[11] Chin-Teng Lin, Fellow, IEEE, Ruei-Cheng Wu, Sheng-Fu Liang, Wen-Hung Chao, Yu-Jie Chen, and Tzyy-Ping Jung, *EEG-Based Drowsiness Estimation for Safety Driving Using Independent Component Analysis,* IEEE Transaction on Circuits and Systems, vol. 52, no. 12, December 2005.

[12] L.F. Marton, L. Losonczi, Neurobiological, smart signal acquisition and improved information extraction methods, FENS 2012 Conference, Barcelona, Spain, 15-17 Jul. 2012