Real time distributed micro-system designed for bio-signal recording

Lajos LOSONCZI[1, 2], László F. MÁRTON[2], Tihamér S. BRASSAI[2],

1 - Lambda Communications Ltd., Tîrgu Mureş, Romania, e-mail: lajos@lambda.ro
2 - Sapientia - University of Transylvania, Tîrgu Mureş, Romania, e-mail: lajos.losonczi@ms.sapientia.ro

Manuscript received August 22, 2013

Abstract: This paper presents a representative use of distributed electronic systems, embedded in applications, operating in real time: an equipment for recording the EEG signals on the scalp, applicated in this study and for the implementation of brain-computer interfaces. There is an established general structure of a real time system dedicated to such applications nevertheless we present the configuration of an equipment developed by our research team. This is an EEG signal acquisition system with nine intelligent distributed sensors.

Keywords: EEG, Smart Sensor, Wireless Sensor Node, Signal Measuring, Real Time System.

1. Introduction

The microprocessor market reached unknown heights at the end of the last millennium. Now, when an average of over 4 microprocessors “work” for every person in the world , we can notice a strong contradiction: although over 96% of the total production of processors end up in embedded electronic systems, most distributed and in real time, the structure of these processors is not suitable for real time application. The design effort is consumed exclusively in the increasing computing power, the introduction of sophisticated hardware algorithms, parallel processing, pipelining, cache memory usage, virtual addressing and other complicated solutions designed to increase processing speed. All the above mentioned solutions have the disadvantage, in terms of real-time distributed applications, of the unpredictability of the execution time of the instructions. Apart of microcontrollers of low and medium complexity, modern powerful processors encounter serious difficulties in processing these applications. The average time of executing increasingly stronger instructions has dramatically decreased, but in distributed embedded applications we do not need average times. Instead we need the exact knowledge of the duration of each instruction, the worst execution time and very precise software timings.

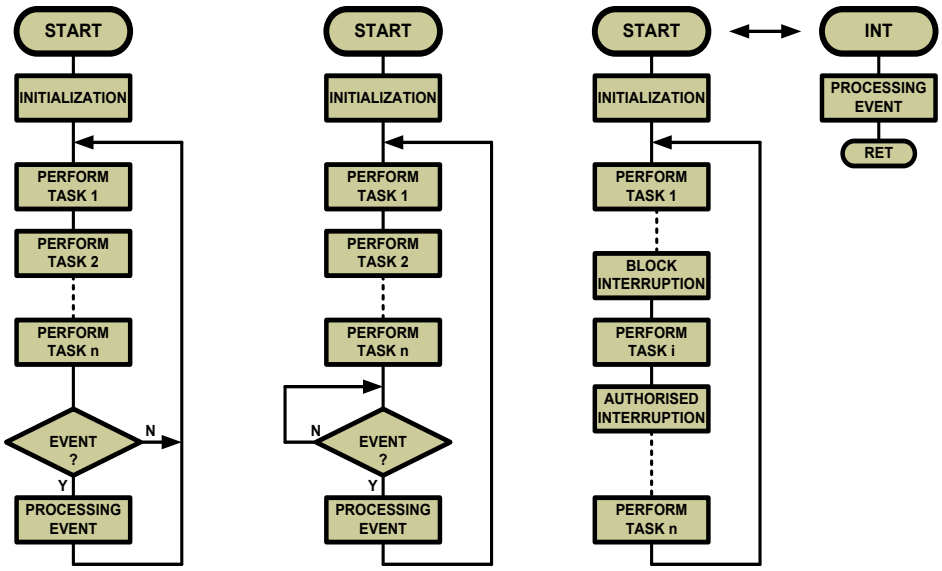

Figure 1: Methods for detecting the occurrence of events.

We must take in consideration another aspect of the embedded control structures: the detection of occurring events and the response to them.

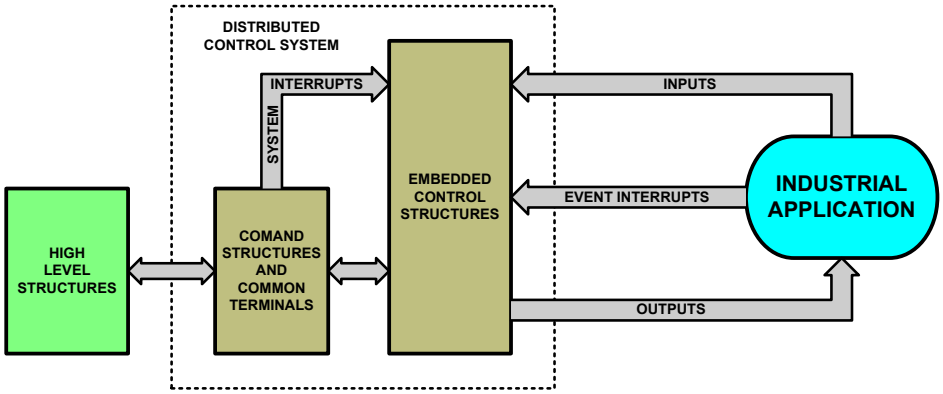

Figure 2: The control structure with interruptions

There are three common methods in practice: input query by repeating the main program sequence in infinite loop (polling), stopping the execution of the main program and waiting the occurrence of the event (busy waiting), or interrupting the main program at the occurrence of the event (interrupt control), as it may be seen in the *Figure 1*.

Obviously, from the point of view of real-time applications, only the last version can be discussed.

Figure 2. presents the structure of a distributed control system, based on controlling the interruptions at the occurrence of the events. As events occur asynchronously – although in most cases the answer must be prompt, respecting the execution time limit (deadline) – two critical situations may happen:

- The processor could be engaged in solving another disruption caused by the occurrence of another event from the application, or from higher levels of the system.
- The treatment of the event interrupting the routine can delay the execution of the main program far too long.

In the case of the current technological development of microelectronics, for distributed embedded real-time applications of medium and high complexity, the optimal solution for avoiding problems that arise from the considerations and assessments made before, is to use two or more asymmetric processors in order to achieve a distributed embedded structure. The principle of such a distribution is shown in *Figure 3*.

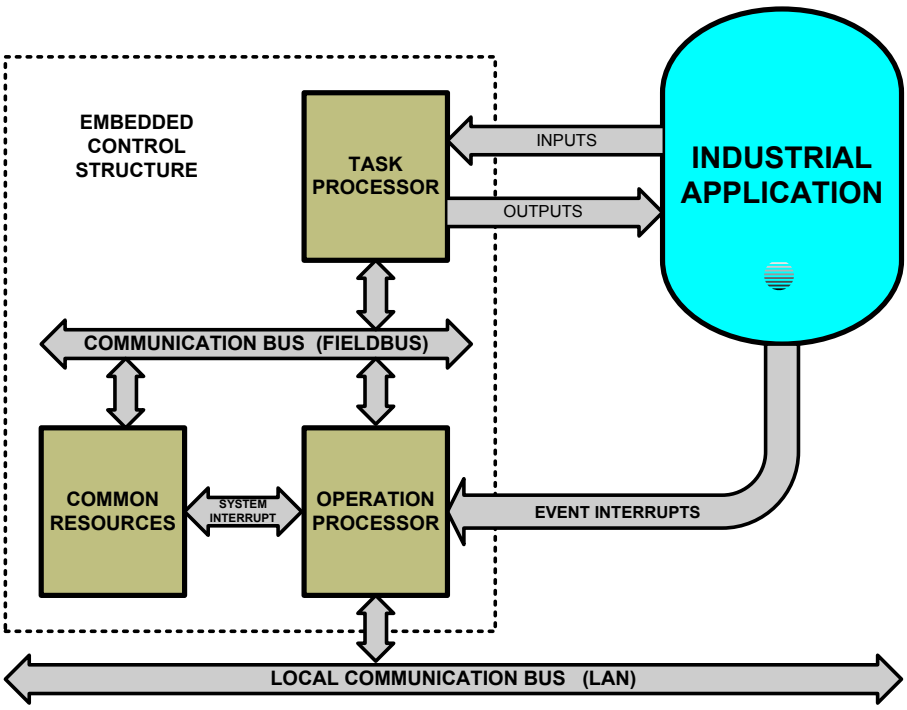

Figure 3: Embedded Control Structure

The task processor performs the necessary operations for the control of the processes from which the application tasks are formed. If these are (most likely) real-time processes, they cannot be interrupted, or in the best case, they can be predictably interrupted for well determined periods of time. In low and medium complexity applications, the process planning is feasible only if the tasks related to the interruption treatment, the synchronizing of process execution, the shared resources and the communication management with higher hierarchical level are taken over by an operating processor.

The structure is asymmetrical; the specific tasks are executed by one processor dedicated to these operations. In terms of software, the structure can be imagined as being composed of two levels: the core (kernel) that is running the operating system and the periphery that is running the application program. The task processor (application control processor), acquires the received information from the sensors and generates the commands for the execution elements. In addition to these tasks, the task processor exchanges data with the shared resources, and receives and confirms synchronizing commands from the operating processor. The latter takes over all tasks related to synchronization and system management.

Communication between the two processors is accomplished on a serial communication channel field usually type IIC or SPI, where the operating processor has the role of the leader (master), and the task processor is the driven (slave). Nonetheless it has the ability to suspend the communication (busy), at moments when non-pre-emptive processes are executed.

In complex applications, if a single task processor cannot face the real-time process execution, two or more task processors can be connected in parallel. During planning we can establish the processes which will need to be coordinated by each of them and their interaction to complete a task. Even the system redundancy and by default the fault tolerance might be increased by the parallel planning of the same process at more task processors.

2. The structure of the real-time system for EEG signal acquisition

The conditioning of the drawn bio-signals refers to the sequence of the analog and digital transformation of the drawn signal. These render the signal suitable for extracting information (data) contained by the primary useful signal.

The electrical circuit, when measuring bio-signals through a non-invasive method, is placed on the surface of the body. Based on the contained electronic structure, it can be classified in the following circuit types:

a.) Passive measurement electrode: a bio-signal measuring electrode, which does not contain any electronic components apart of the metal contact wire,

connected to an electronic conditioning circuit located at some distance from the measuring point.

b.) Active measurement electrode: a bio-signal measuring electrode containing (in the casing of the electrode) a part of the electronic circuit for the conditioning of the drawn bio-signal.

c.) Intelligent measuring sensor: a bio-signal measuring electrode, containing, next to the electronic circuit for the analog and digital conditioning of the drawn bio-signal, a central processing unit with a microcontroller made of a small or medium complexity, which provides technical intelligence to the circuit.

d.) Independent measuring node: a bio-signal measuring electrode, containing – next to the electronic circuit for the analog and digital conditioning of the drawn bio-signal and the central processing unit with a microcontroller made of a small or medium complexity, providing technical intelligence to the circuit – a wireless transmission circuit of the collected data based on a specific communication protocol embedded in the firmware.

e.) Smart measuring module: independent bio-signal measuring node, which (incorporated in the casing of the electrode) – next to the electronic circuit for the analog and digital conditioning of the drawn bio-signal and the central processing unit with a microcontroller made of a small or medium complexity, providing technical intelligence to the circuit, a wireless transmission protocol of the collected data – also contains a circuit and protocol for self-testing, self-calibrating and modification of the main technical parameters (for instance: gain, frequency band, pole filtering and sampling frequency).

Figure 4. shows the structure of an equipment designed by our research group for the non-invasive acquisition of EEG signals from nine points on the surface of the scalp, which use intelligent sensors for the measurement of the signals. The bio-signal measurement circuit presented, falls into the c) category, intelligent measuring sensors. The intelligent sensors also represent the nodes of a data communication network.

The network communication presents a series of advantages compared to the transmission via dedicated links: lower cabling costs, a single device interface, easy installation, easy expansion, the transmitted data can be more complex and the transmission can be done at greater distances [1], [2], [3].

The equipment connected to the network must have a minimum intelligence in order to be able to implement the communication protocol [5]. A program is part of the intelligent circuit which implements the network communication protocol, the acquisition and temporary data storing procedure.

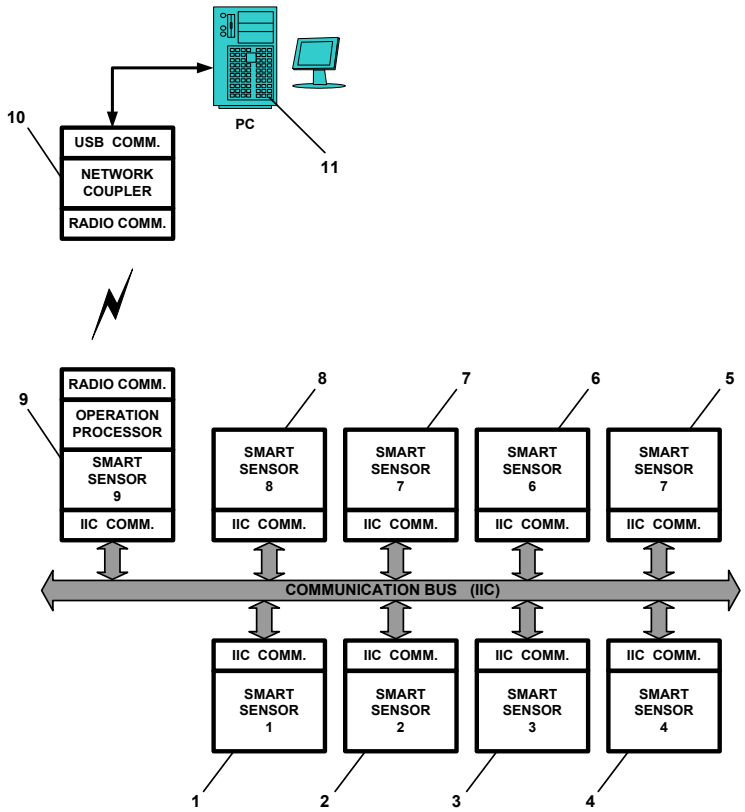

Figure 4: Block scheme of EEG signal acquisition equipment with distributed network of intelligent sensors

The equipment consists of nine sensors, which form a unique bus topology including a central node (*Figure 5.*) and eight terminal nodes (*Figure 6.*). The network nodes communicate with the higher structures through the central node, which in addition to the measuring sensor function is also an operating processor with the gateway role between the wired communication channel of the measuring sensors and the wireless communication channel with superior structures. This latter being a coupling device connected to a central computer. The coupler has the role of gateway between the wireless communication bus with the measurement nodes, and the USB communication channel with the computer, and controls the network traffic based on an implemented protocol. The sensors are placed and positioned on the surface of the scalp using a mechanical device, having a central body in which the central node is placed, and eight flexible terminals, at the end of which the measurement nodes are positioned.

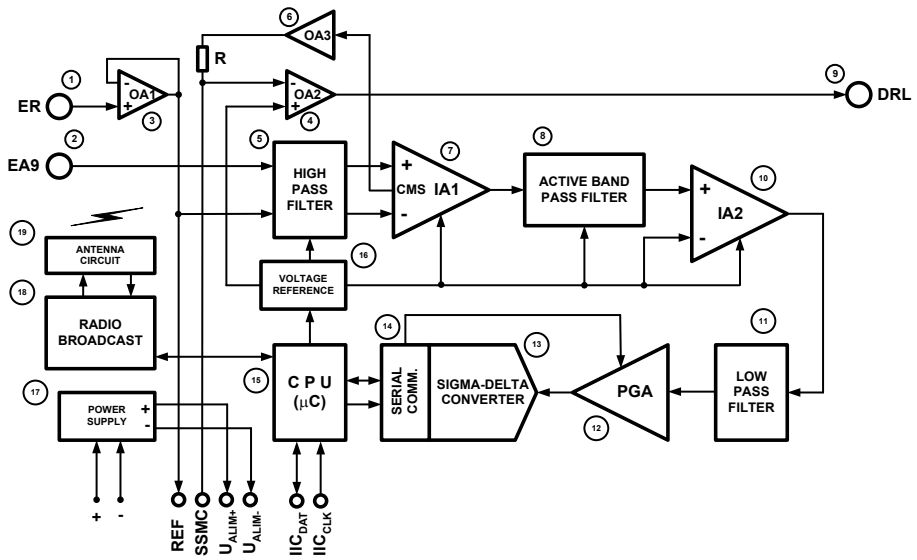

Figure 5: Detailed block scheme of the intelligent sensor for measuring EEG signals representing the central node in the bio-signals acquisition network.

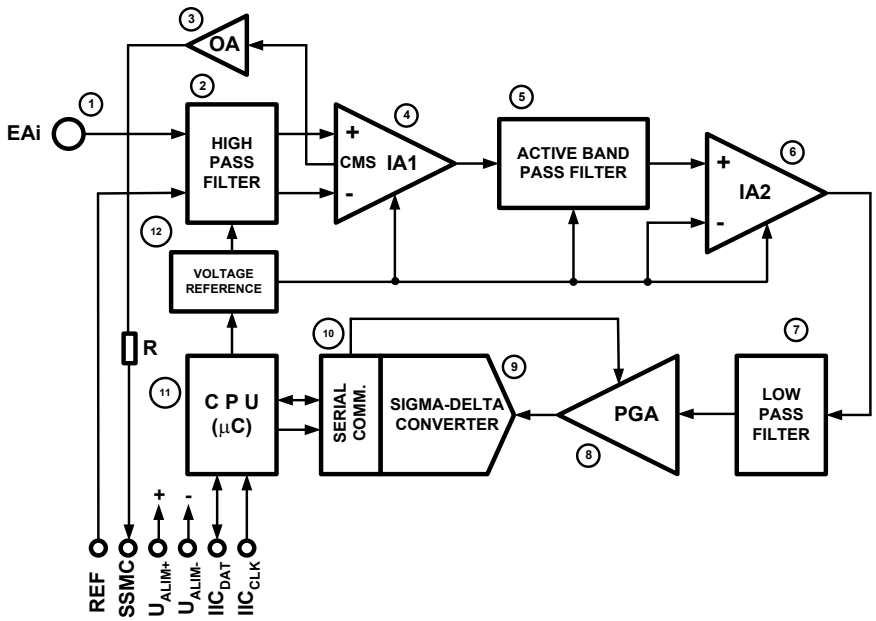

Figure 6: Detailed block scheme of an intelligent sensor for measuring EEG signals representing a terminal node in the bio-signal acquisition network

3. Conclusions:

The distributed network of the EEG signal measuring sensors designed by our team and presented in the paper, forms a cluster type structure on the level of the line bus (IIC). The cluster of the intelligent sensors communicates with the central node with the role of gateway, through a wired communication channel, and the central node communicates with the higher structures through a wireless communication channel. In the cluster, the nodes communicate with each other on the same wired bus, to exchange synchronization information, calibration, establishing the reference level and establishing the derivatives in the case of bipolar EEG measurements.

The equipment for EEG signal acquisition with a network of measuring intelligent sensors, presents the following advantages: deterministic and predictable operation, relatively short and guaranteed data transmission; optimized protocol for short, efficient and periodic messages; established time response; immunity to noise, suitable error control mechanism; low cost for the network interfacing; low wiring costs, easy installation and maintenance; high miniaturization and portability. For experiments with sampling rate of 10000 sps, we achieved: CMRR 127dB and global input noise 0.7μVpp.

Other important advantages are the possibility of:

- using dry electrodes for collecting EEG signals
- integrating the equipment in mobile measuring systems
- using the equipment in systems dedicated to the brain-computer interfaces(BCI), [4].

Acknowledgements

This work is part of the project funded by the Romanian National Authority for Scientific Research, grant No. 347/23.08.2011.

References:

[1] Binnie C.D., Rovan A.J, Gutter T.A., "Manual of Electroencephalographic Technology", Cambridge UK, Cambrge Univ. Press, 1982.
[2] Karl H., Willig A., Wolisz A., "Wireless Sensor Networks", Springer Verlag Berlin, 2004.
[3] Harsanyi G., "Sensors in Biomedical Applications", CRC Press, 2000.
[4] Marton L.F., Losonczi L., "Neurobiological, smart signal acquisition and improved information extraction methods", FENS 2012 Conference, Barcelona, Spain, 15-17 Jul. 2012.
[5] Teplan M., "Fundamentals of EEG measurement", Measurement Science Review, Slovak Academy of Sciences, Institute of Measurement Science, vol.2, sec.2, 2002.